THIS DOCUMENT AND THE INFORMATION IT CONTAINS ARE PROPERTY OF EFFILUX AND CONFIDENTIAL. THEY SHALL NOT BE REPRODUCED NOR DISCLOSED TO ANY PERSON EXCEPT TO THOSE HAVING A NEED TO KNOW THEM WITHOUT PRIOR WRITTEN CONSENT OF EFFILUX

CE DOCUMENT ET LES INFORMATIONS QU'IL CONTIENT SONT CONFIDENTIELS ET SONT LA PROPRIETE EXCLUSIVE DE EFFILUX. ILS NE DOIVENT ETRE COMMUNIQUES QU'AUX PERSONNES AYANT A EN CONNAITRE ET NE PEUVENT ETRE REPRODUITS NI DIVULGUES A TOUTE AUTRE PERSONNE SANS AUTORISATION PREALABLE ECRITE PAR EFFILUX

EFFI-SQR ASSEMBLY GUIDE

(for sizes > EFFI-SQR-FLEX-15)

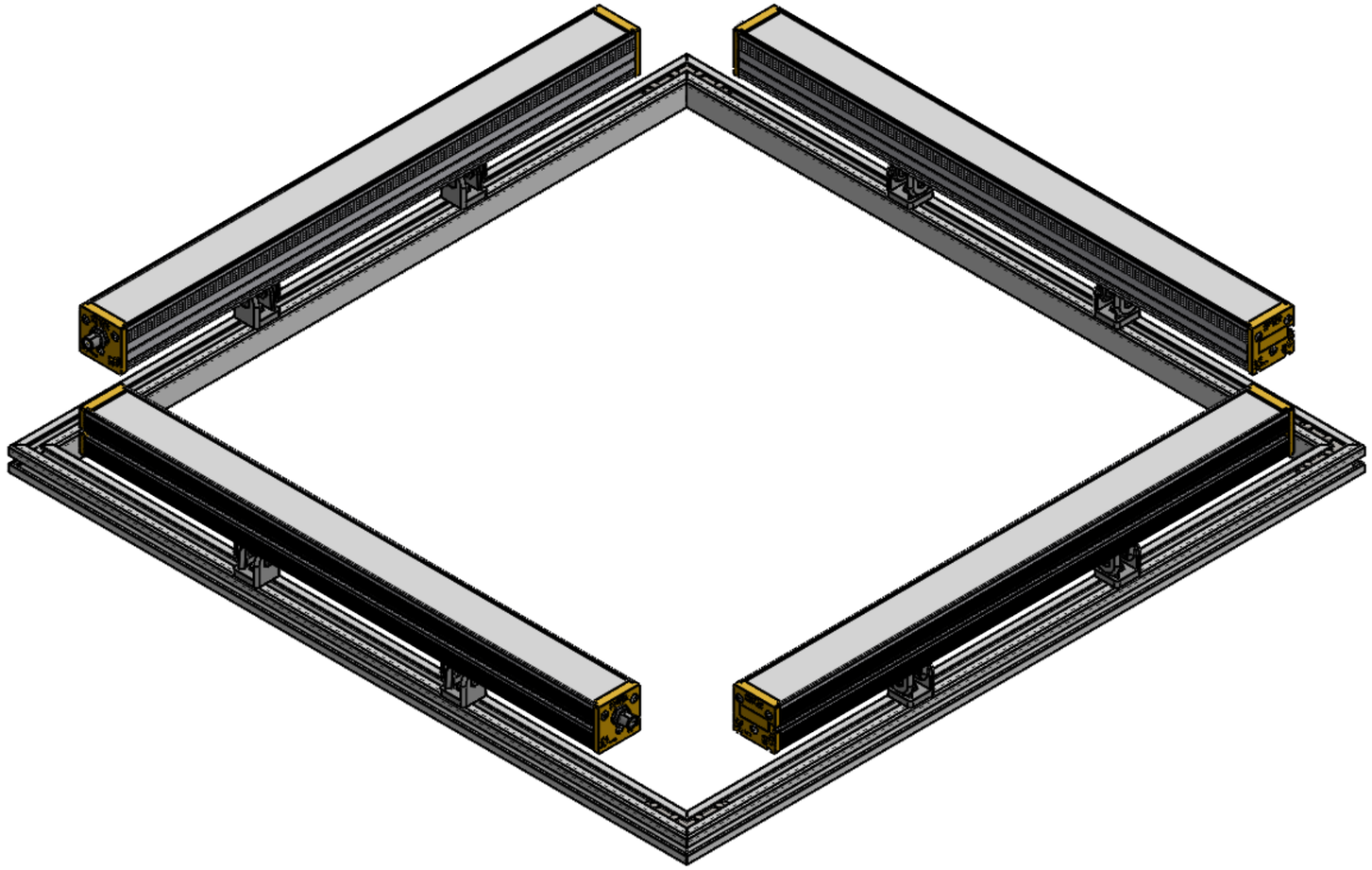

Drawn by	Verified by	Version	Version description
t.gusseau	a.paul	V1.01	V1.00 : Creation V1.01 : Size limit added
Date 23/08/2023	**Date** 23/08/2023		

Scale	Part number		Revision	Designation
1:5	/		/	EFFI-SQR ASSEMBLY GUIDE
Format A3	**Tol (unless specified)** ± 0.2	**Unit : mm**	**RoHS Compliant** **REACH Compliant**	Mini Parc du Verger Bat E 1 Rue de Terre Neuve Tel : +33 (0)9 72 61 34 02
Page 1/7				

Efficient Led Lighting effiLux

THIS DOCUMENT AND THE INFORMATION IT CONTAINS ARE PROPERTY OF EFFILUX AND CONFIDENTIAL. THEY SHALL NOT BE REPRODUCED NOR DISCLOSED TO ANY PERSON EXCEPT TO THOSE HAVING A NEED TO KNOW THEM WITHOUT PRIOR WRITTEN CONSENT OF EFFILUX

CE DOCUMENT ET LES INFORMATIONS QU'IL CONTIENT SONT CONFIDENTIELS ET SONT LA PROPRIETE EXCLUSIVE DE EFFILUX. ILS NE DOIVENT ETRE COMMUNIQUES QU'AUX PERSONNES AYANT A EN CONNAITRE ET NE PEUVENT ETRE REPRODUITS NI DIVULGUES A TOUTE AUTRE PERSONNE SANS AUTORISATION PREALABLE ECRITE PAR EFFILUX

PART LISTING

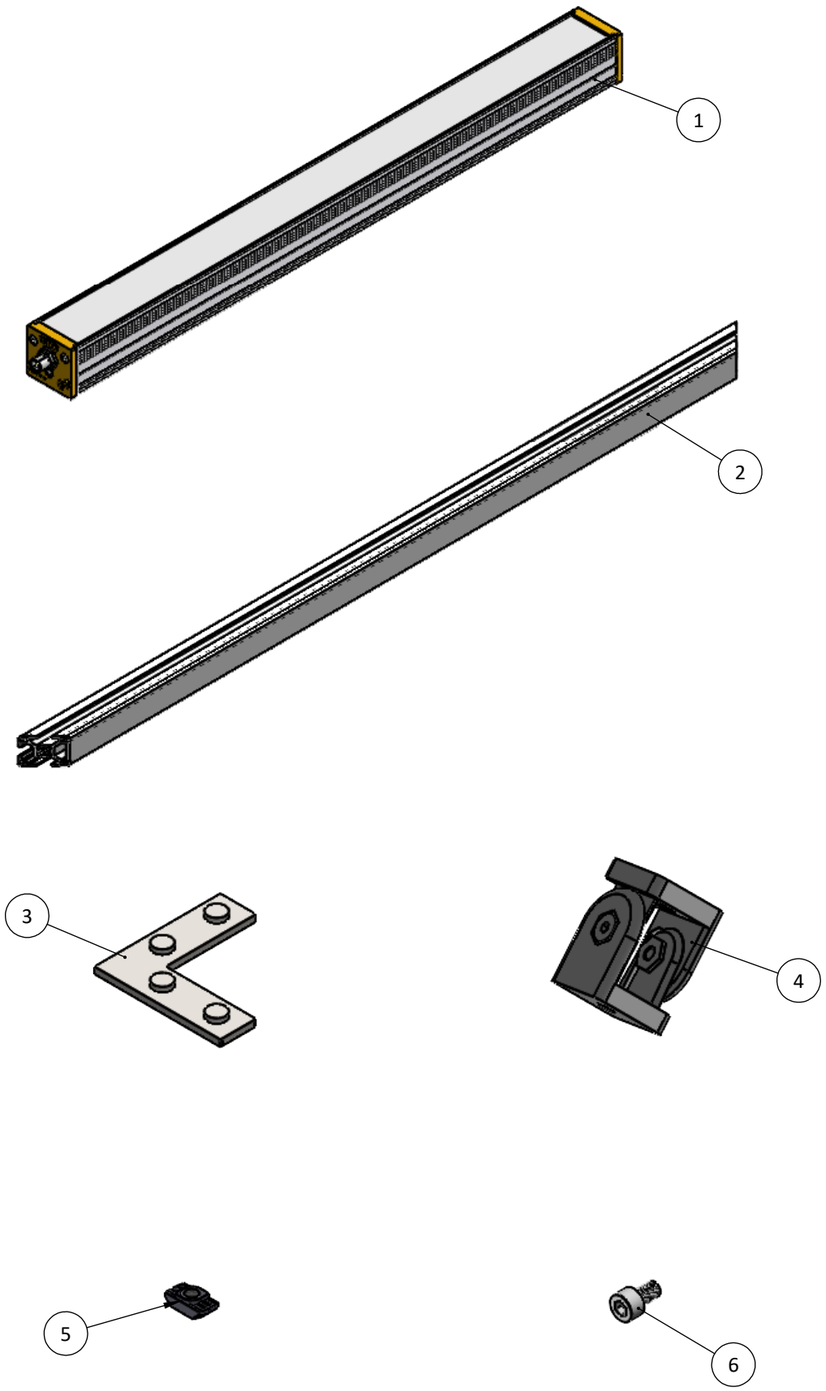

No	DESIGNATION	QTY
1	EFFI-FLEX	4
2	PROFILE	4
3	BRACKET + SCREW	8
4	PIVOT JOINT	/
5	T-NUT BOLT	/
6	SCREW	/

Drawn by	Verified by	Version	Version description
t.gusseau	a.paul	V1.01	V1.00 : Creation V1.01 : Size limit added
Date 23/08/2023	Date 23/08/2023		

Scale	Part number		Revision	Designation	
1:5	/		/	EFFI-SQR ASSEMBLY GUIDE	
Format A3	Tol (unless specified) ± 0.2	Unit : mm	RoHS Compliant REACH Compliant	Mini Parc du Verger Bat E 1 Rue de Terre Neuve Tel : +33 (0)9 72 61 34 02	effiLux Efficient Led Lighting
Page 2/7					

THIS DOCUMENT AND THE INFORMATION IT CONTAINS ARE PROPERTY OF EFFILUX AND CONFIDENTIAL. THEY SHALL NOT BE REPRODUCED NOR DISCLOSED TO ANY PERSON EXCEPT TO THOSE HAVING A NEED TO KNOW THEM WITHOUT PRIOR WRITTEN CONSENT OF EFFILUX

CE DOCUMENT ET LES INFORMATIONS QU'IL CONTIENT SONT CONFIDENTIELS ET SONT LA PROPRIETE EXCLUSIVE DE EFFILUX. ILS NE DOIVENT ETRE COMMUNIQUES QU'AUX PERSONNES AYANT A EN CONNAITRE ET NE PEUVENT ETRE REPRODUITS NI DIVULGUES A TOUTE AUTRE PERSONNE SANS AUTORISATION PREALABLE ECRITE PAR EFFILUX

STEP 1

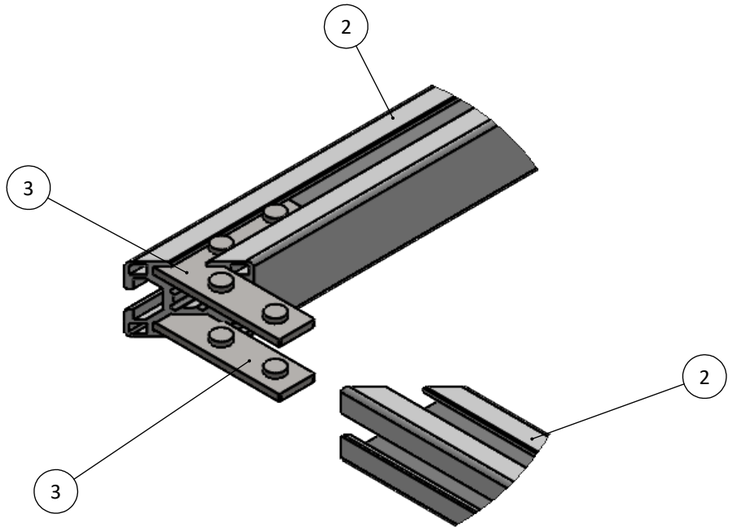

No	DESIGNATION	QTY
2	PROFILE	4
3	BRACKET + SCREW	8

1- INSERT EACH BRACKET (3) IN EACH CORNER OF THE PROFILES (2)
2- TIGHTEN THE BRACKETS (3) ONCE THE SQUARE IS MADE

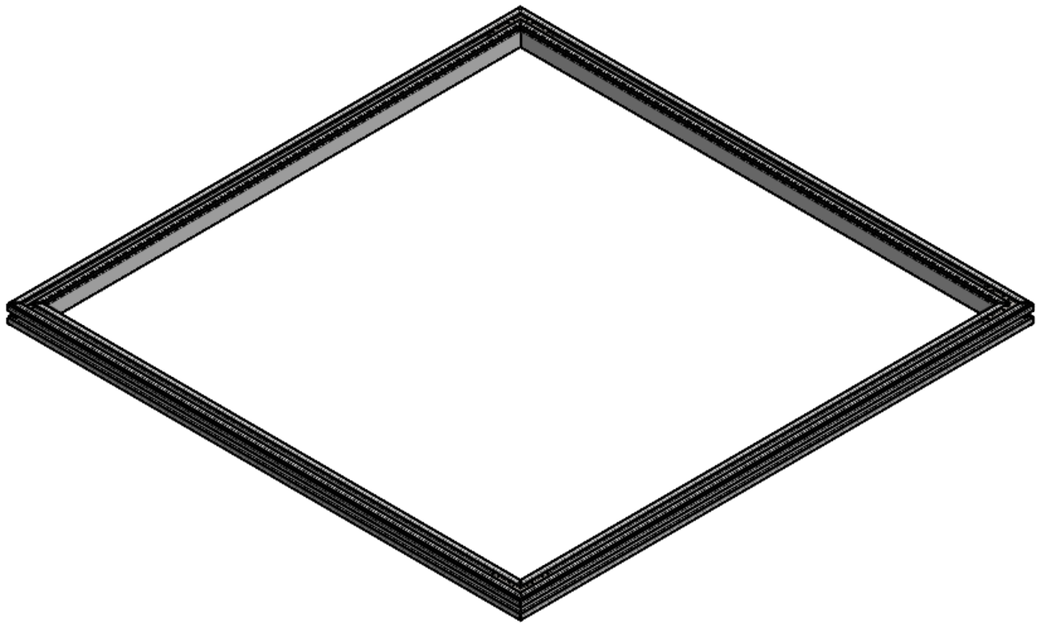

Drawn by	Verified by	Version	Version description
t.gusseau	a.paul	V1.01	V1.00 : Creation V1.01 : Size limit added
Date 23/08/2023	Date 23/08/2023		

Scale	Part number	Revision	Designation
1:2	/	/	EFFI-SQR ASSEMBLY GUIDE
Format A3	Tol (unless specified) ± 0.2	Unit : mm	RoHS Compliant REACH Compliant
Page 3/7			

Mini Parc du Verger
Bat E
1 Rue de Terre Neuve
Tel : +33 (0)9 72 61 34 02

Efficient Led Lighting effiLux

THIS DOCUMENT AND THE INFORMATION IT CONTAINS ARE PROPERTY OF EFFILUX AND CONFIDENTIAL. THEY SHALL NOT BE REPRODUCED NOR DISCLOSED TO ANY PERSON EXCEPT TO THOSE HAVING A NEED TO KNOW THEM WITHOUT PRIOR WRITTEN CONSENT OF EFFILUX

CE DOCUMENT ET LES INFORMATIONS QU'IL CONTIENT SONT CONFIDENTIELS ET SONT LA PROPRIETE EXCLUSIVE DE EFFILUX. ILS NE DOIVENT ETRE COMMUNIQUES QU'AUX PERSONNES AYANT A EN CONNAITRE ET NE PEUVENT ETRE REPRODUITS NI DIVULGUES A TOUTE AUTRE PERSONNE SANS AUTORISATION PREALABLE ECRITE PAR EFFILUX

STEP 2

No	DESIGNATION	QTY
1	EFFI-FLEX	4
4	PIVOT JOINT	/
5	T-NUT BOLT	/
6	SCREW	/

1- INSERT THE T-NUT BOLTS (5) IN EACH EFFI-FLEX LIGHT (1)
2- INSERT THE SCREWS (6) THROUGH EACH PIVOT JOINT (4) AND EACH T-NUT BOLT (5)
3- ADJUST THE DISTANCE OF THE PIVOT JOINTS (4) IN ORDER TO CENTRE THE EFFI-FLEX LIGHT (1) ON THE PIVOT JOINTS (4)
4- TIGHTEN THE SCREWS (6)

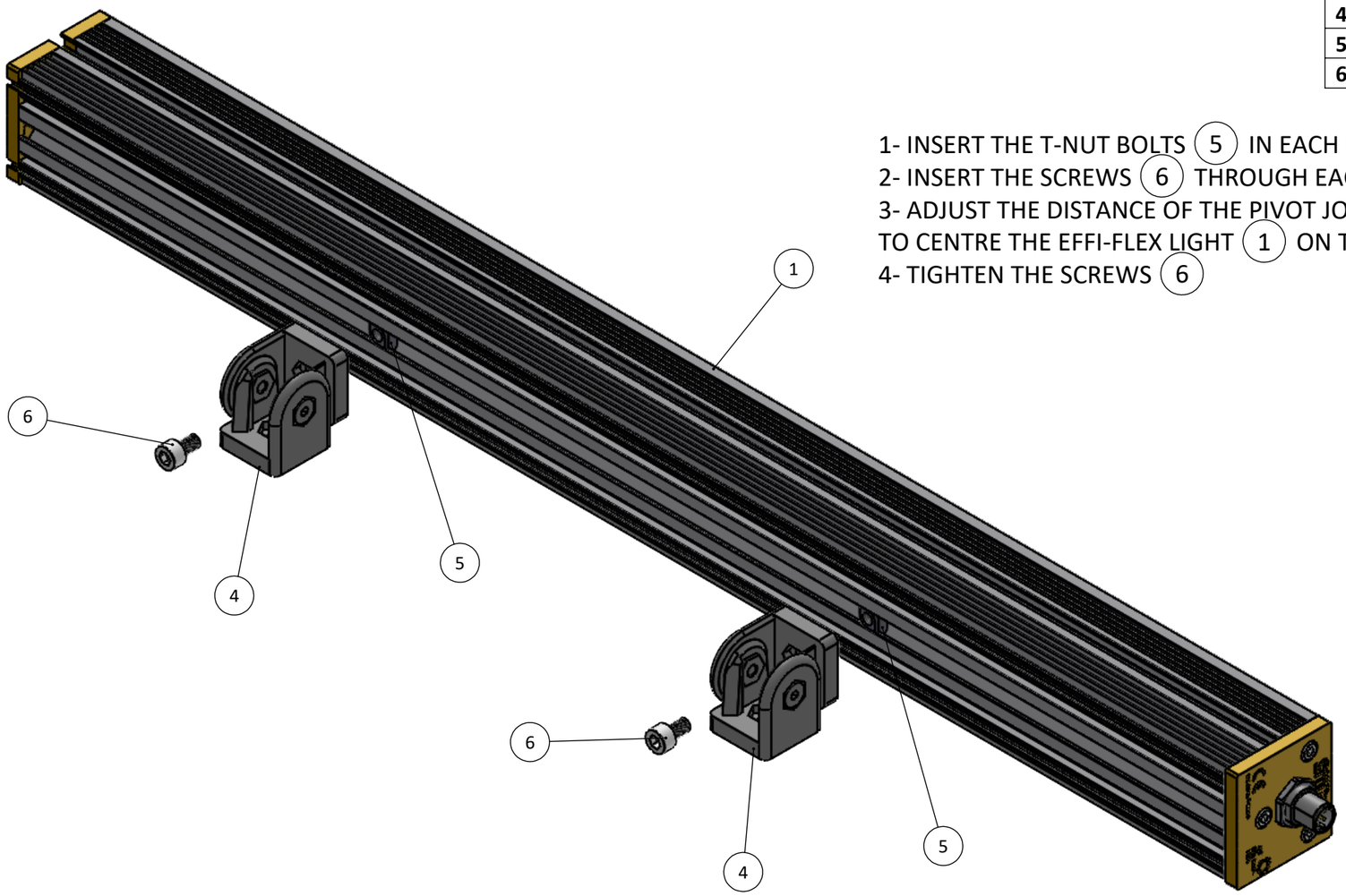

Drawn by	Verified by	Version	Version description
t.gusseau	a.paul	V1.01	V1.00 : Creation V1.01 : Size limit added
Date 23/08/2023	Date 23/08/2023		

Scale	Part number		Revision	Designation
1:2	/		/	EFFI-SQR ASSEMBLY GUIDE
Format A3	Tol (unless specified) ± 0.2	Unit : mm	RoHS Compliant REACH Compliant	Mini Parc du Verger Bat E 1 Rue de Terre Neuve Tel : +33 (0)9 72 61 34 02
Page 4/7				

Efficient Led Lighting effiLux

THIS DOCUMENT AND THE INFORMATION IT CONTAINS ARE PROPERTY OF EFFILUX AND CONFIDENTIAL. THEY SHALL NOT BE REPRODUCED NOR DISCLOSED TO ANY PERSON EXCEPT TO THOSE HAVING A NEED TO KNOW THEM WITHOUT PRIOR WRITTEN CONSENT OF EFFILUX

CE DOCUMENT ET LES INFORMATIONS QU'IL CONTIENT SONT CONFIDENTIELS ET SONT LA PROPRIETE EXCLUSIVE DE EFFILUX. ILS NE DOIVENT ETRE COMMUNIQUES QU'AUX PERSONNES AYANT A EN CONNAITRE ET NE PEUVENT ETRE REPRODUITS NI DIVULGUES A TOUTE AUTRE PERSONNE SANS AUTORISATION PREALABLE ECRITE PAR EFFILUX

STEP 3

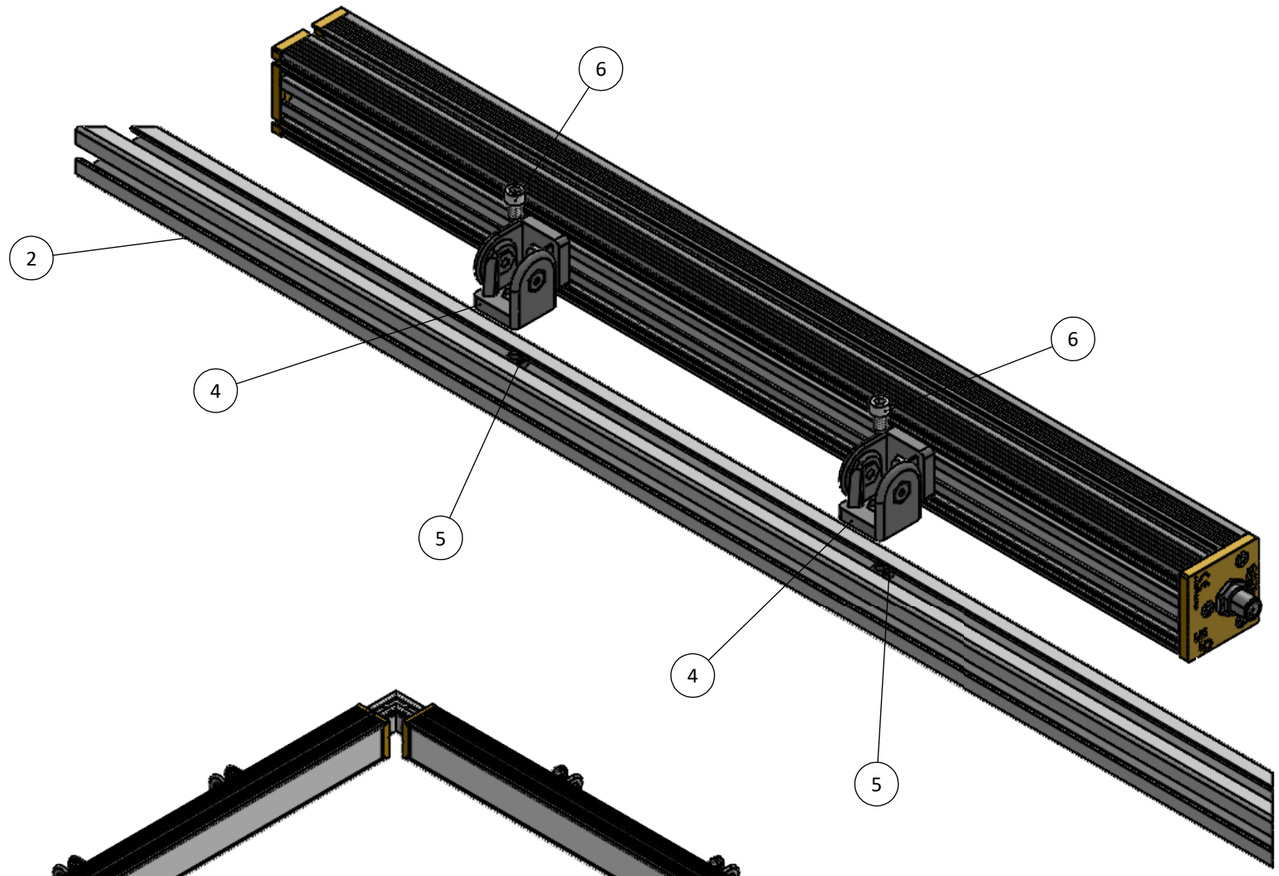

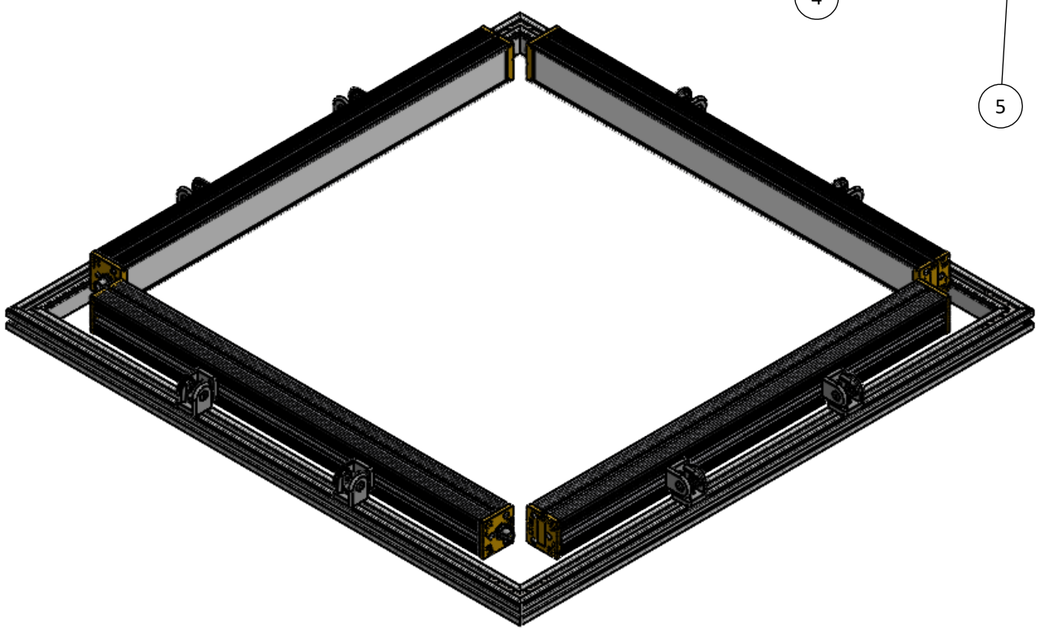

No	DESIGNATION	QTY
1	EFFI-FLEX	4
2	PROFILE	4
4	PIVOT JOINT	/
5	T-NUT BOLT	/
7	SCREW	/

1- INSERT THE T-NUT BOLTS (5) IN EACH PROFILE (2)
2- INSERT THE SCREWS (6) THROUGH EACH PIVOT JOINT (4)
3- CENTRE THE EFFI-FLEX LIGHT (1) ON THE PROFILE (4)
4- TIGHTEN THE SCREWS (6)

Drawn by	Verified by	Version	Version description
t.gusseau	a.paul	V1.01	V1.00 : Creation V1.01 : Size limit added
Date 23/08/2023	Date 23/08/2023		

Scale	Part number		Revision	Designation
1:3	/		/	EFFI-SQR ASSEMBLY GUIDE
Format A3	Tol (unless specified) ± 0.2	Unit : mm	RoHS Compliant REACH Compliant	Mini Parc du Verger Bat E 1 Rue de Terre Neuve Tel : +33 (0)9 72 61 34 02
Page 5/7				Efficient Led Lighting effiLux

THIS DOCUMENT AND THE INFORMATION IT CONTAINS ARE PROPERTY OF EFFILUX AND CONFIDENTIAL. THEY SHALL NOT BE REPRODUCED NOR DISCLOSED TO ANY PERSON EXCEPT TO THOSE HAVING A NEED TO KNOW THEM WITHOUT PRIOR WRITTEN CONSENT OF EFFILUX

CE DOCUMENT ET LES INFORMATIONS QU'IL CONTIENT SONT CONFIDENTIELS ET SONT LA PROPRIETE EXCLUSIVE DE EFFILUX. ILS NE DOIVENT ETRE COMMUNIQUES QU'AUX PERSONNES AYANT A EN CONNAITRE ET NE PEUVENT ETRE REPRODUITS NI DIVULGUES A TOUTE AUTRE PERSONNE SANS AUTORISATION PREALABLE ECRITE PAR EFFILUX

STEP 4

No	DESIGNATION	QTY
4	PIVOT JOINT	8

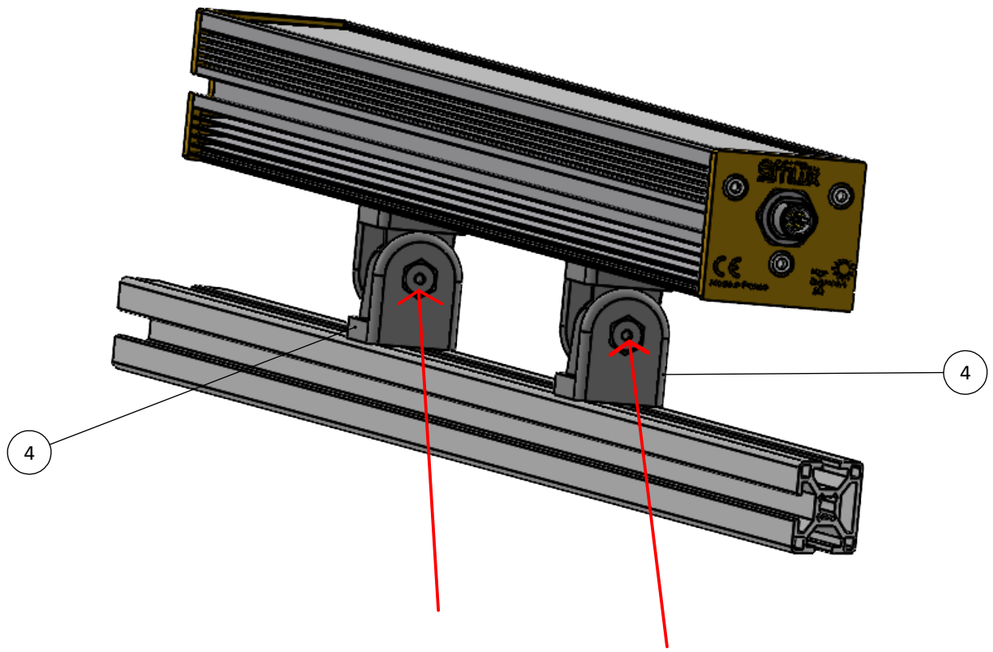

1- ADJUST THE PIVOT JOINT (4) ANGLE TO FIT YOUR NEEDS

Drawn by	Verified by	Version	Version description
t.gusseau	a.paul	V1.01	V1.00 : Creation V1.01 : Size limit added
Date 23/08/2023	Date 23/08/2023		

Scale	Part number		Revision	Designation
1:2	/		/	EFFI-SQR ASSEMBLY GUIDE
Format A3	Tol (unless specified) ± 0.2	Unit : mm	RoHS Compliant REACH Compliant	Mini Parc du Verger Bat E 1 Rue de Terre Neuve Tel : +33 (0)9 72 61 34 02
Page 6/7				Efficient Led Lighting effiLux

THIS DOCUMENT AND THE INFORMATION IT CONTAINS ARE PROPERTY OF EFFILUX AND CONFIDENTIAL. THEY SHALL NOT BE REPRODUCED NOR DISCLOSED TO ANY PERSON EXCEPT TO THOSE HAVING A NEED TO KNOW THEM WITHOUT PRIOR WRITTEN CONSENT OF EFFILUX

CE DOCUMENT ET LES INFORMATIONS QU'IL CONTIENT SONT CONFIDENTIELS ET SONT LA PROPRIETE EXCLUSIVE DE EFFILUX. ILS NE DOIVENT ETRE COMMUNIQUES QU'AUX PERSONNES AYANT A EN CONNAITRE ET NE PEUVENT ETRE REPRODUITS NI DIVULGUES A TOUTE AUTRE PERSONNE SANS AUTORISATION PREALABLE ECRITE PAR EFFILUX

WELL DONE ! YOU MADE IT TO THE END.
PLEASE, DO NOT HESITATE TO CONTACT EFFILUX FOR MORE INFORMATION.

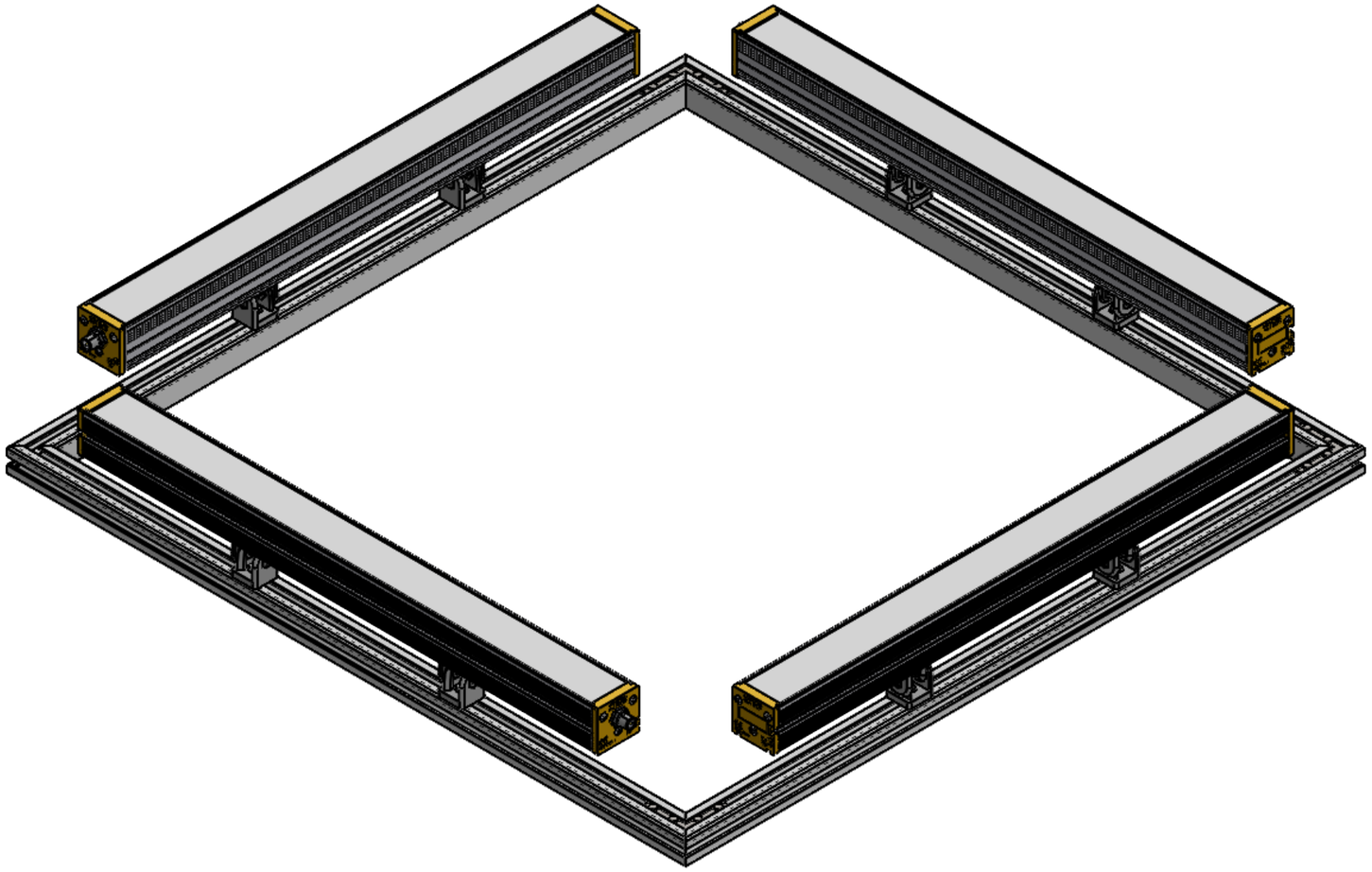

Drawn by	Verified by	Version	Version description
t.gusseau	a.paul	V1.01	V1.00 : Creation V1.01 : Size limit added
Date 23/08/2023	**Date** 23/08/2023		

Scale	Part number		Revision	Designation
1:5	/		/	**EFFI-SQR ASSEMBLY GUIDE**
Format A3	**Tol (unless specified)** ± 0.2	**Unit : mm**	**RoHS Compliant** **REACH Compliant**	Mini Parc du Verger Bat E 1 Rue de Terre Neuve Tel : +33 (0)9 72 61 34 02
Page 7/7				

Efficient Led Lighting effiLux